INSTALLATION CONFIGURATION - PCxp COAXIALS

Click to view other models in this family

Our coaxial speakers provide an excellent entry into premium sound quality without high cost. Engineered for quick installation, they are truly a drop-in replacement for factory speakers. Before the final installation, you should take note of some basics with system planning and installation guidelines to avoid potential problems and ensure the best sound possible once your Blaupunkt speakers are installed.

SYSTEM PLANNING

The largest possible impact on any audio system (home or car) is the tonal quality of the loudspeakers, their respective placement, and their overall efficiency (loudness). A 4x20 watt amplifier and four dual-cone speakers is never going to make an impressive performance. Many newer cars have acceptable speaker locations but a factory 4x1 0 watt system with dual cone speakers is just not going to impress anyone. Install your new coaxials and establish a pleasing mid and high frequency response, and with good imaging properties. To move up in performance, add an outboard subwoofer and amp to give an emotional sensation of "strength" to the audio system.

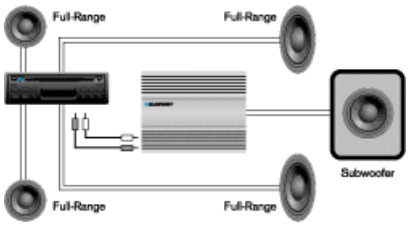

SYSTEM IMPLEMENTATION

Speaker configurations are a common problem in autosound installations. We want to achieve a sound field in front of us Qike a live concert) as compared to sound partly from the front and partly behind us. This dictates good midrange and tweeter speakers in front, usually mounted in the doors for good left/right balance, with high-pass crossovers set greater than 80-100 Hz. The best stereo image will occur when the front speakers are spaced as far forward as possible attempting to achieve nearly equal distance from the speakers to the listening position. For deep bass a subwoofer is required but is nearly always located behind us in a rear trunk or rear hatch area. If the subwofer crossover is too high in frequency male voices can be heard "gurgling" out of the subwoofer speaker and therefore pulls the sound-stage to the rear of the car, which is very unnatural and therefore undesirable.

AMPLIFIER POWER

Amplifier choice and power is important but less so compared to speaker choice and placement. Matching the rms (continuous) power capability to that of the speaker is important but it should be noted that "under-powering" a system can often damage more tweeters than providing slightly more power than stated by the speakers. If the speakers are rated to 50 watts rms, you can often run 60-80 watt rms amplifiers without concern IF the amps are not driven into clipping (deep distortion). IMPEDANCE is the electrical resistance to AC current flow and is typically 4 ohms for most car speakers. Impedance loads should not fall below the recommended minimum load tolerances of the amplifier (commonly 2 ohms) or the amplifiers will heat up and sometimes shut down.

SOUND QUALITY VS. LOUDNESS

A well designed sound system can provide good sound quality and still play loud. Above about 120 dB (decibels) the sound isn't perceived as getting much louder due to the non-linearities of the human ear. A four loudspeaker system with the per-speaker efficiency rating of 90 dB (1 watt/i meter) will often achieve about 110-115 dB if driven by 100 watts per speaker channel. (Although often debated, this is more than enough sound pressure level for most humans to enjoy and can easily cause hearing loss if listened to at such levels for hours at a time.)

INSTALLATION GUIDELINES

We strongly recommend that you have your Blaupunkt subwoofers professionally installed. If you choose to do your own installation please note the following important information:

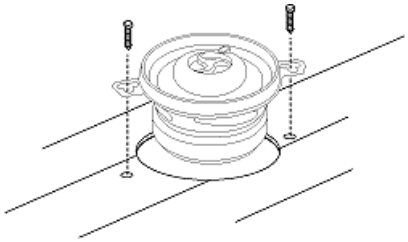

- Before cutting any trim or metal make sure your final installation will clear all moving parts, factory cables, wires, and hoses.
- Be sure to leave enough slack in the wiring to prevent the need to pull or stretch wires if service is needed later
- Tie down all loose wires with nylon wire ties to prevent them from getting caught in moving parts or shorted out due to abrasions from moving over time.
- Never mount speakers in a vehicle's wheel wells or areas where they may be subjected to moisture or road spray.
- Proper speaker polarity must be observed. The polarity positive side is marked by a (+) symbol or a red colored dot. At low frequencies woofers out of phase will acoustically cancel one another thus resulting in little bass output.
- Although components used in Blaupunkt speakers exceed most production quality standards, speaker frames can still be twisted by improper installation on uneven surfaces.
- This can occur when surfaces are heavily padded or carpeted and the screws are unevenly tightened or over tightened. The results will be a damaged voice coil assembly due to knocking it off center.
- When installing more than one speaker per amplifier channel be sure that the combined impedance values do not fall below the recommended minimum speaker load values of the amplifier (most amplifiers will overheat over time and possibly shut down with loads below 2 ohms).
- Speaker wire size should be sufficient to carry the full power of the amplifier (16 gauge or larger is sufficient in about 90% of all audio systems assuming <100 watt

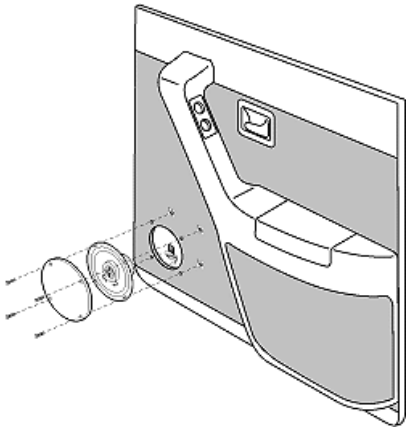

amplifiers and wire runs under 20 feet)

- Speaker wires should be electrically and physically isolated from the vehicle and routed away from any factory wiring that carries high currents or noises (e.g., ABS brake systems and engine computer signals)

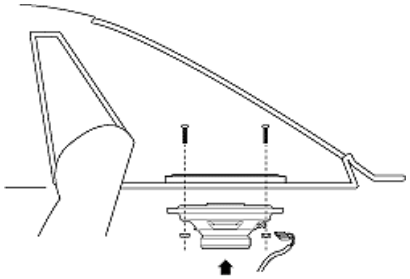

FINAL SYSTEM TEST & TROUBLESHOOTING

Once the system is installed, turn on the total audio system main power switch and SLOWLY turn the volume up using a music selection with a full range of frequencies. If you experience any problems take corrective action immediately to prevent damage to the speaker amplifier, and vehicle.